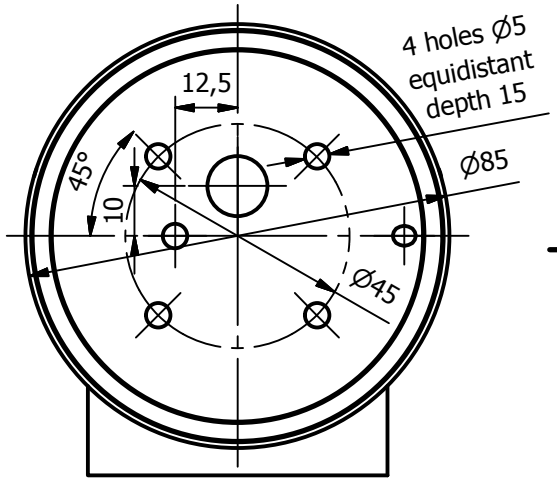

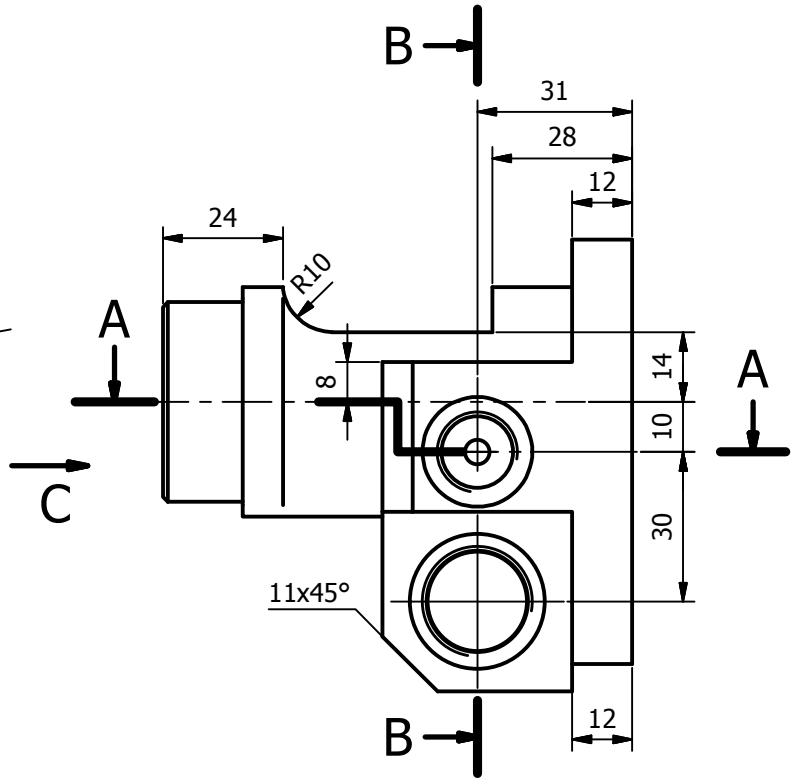

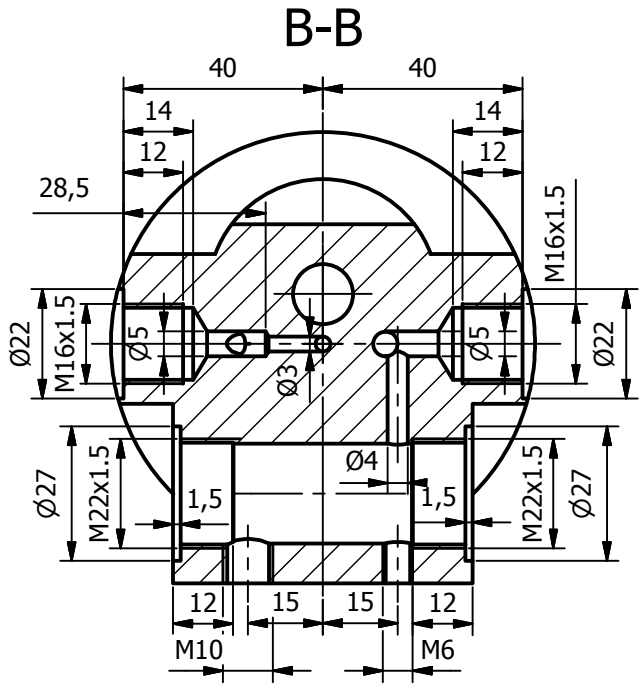

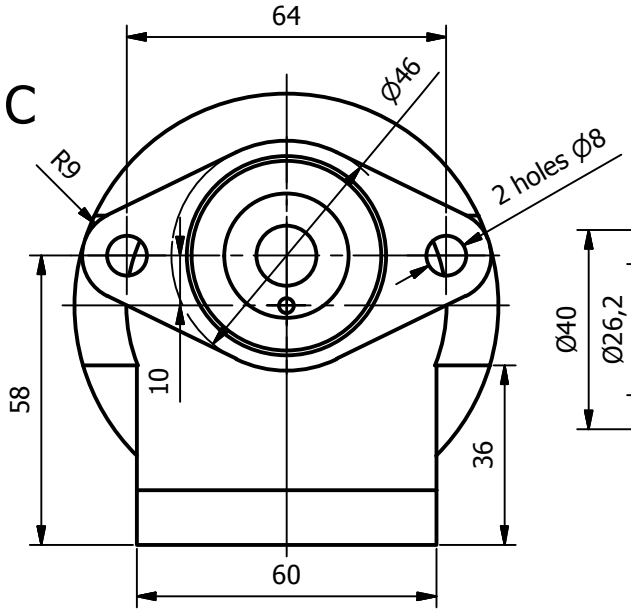

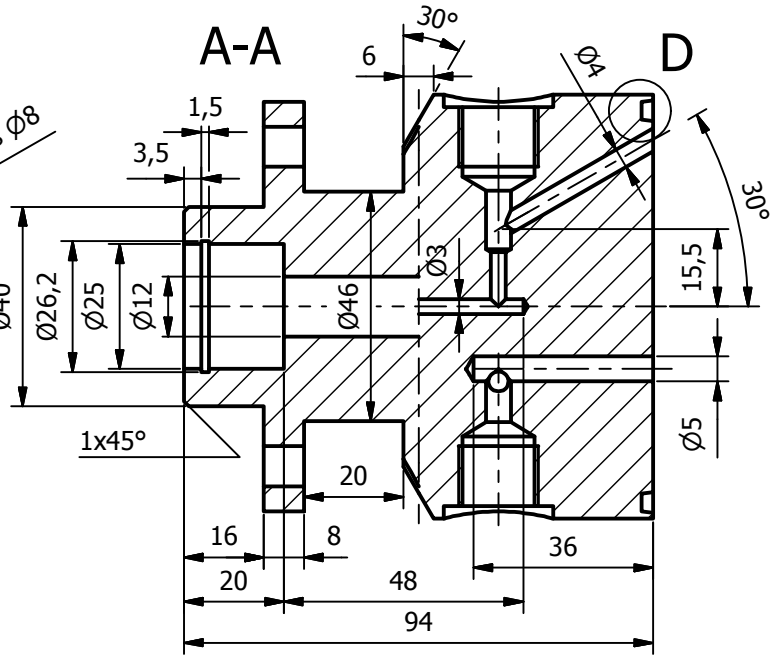

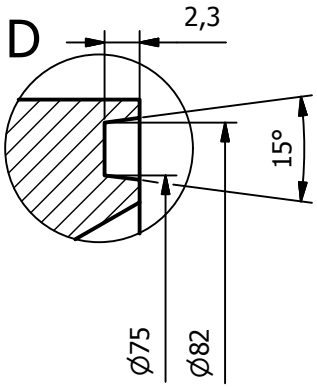

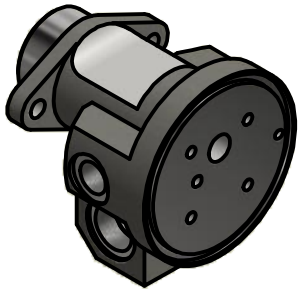

269720.116 mm^3